ZANEEN architectural

Only Light
Installation Instruction

1

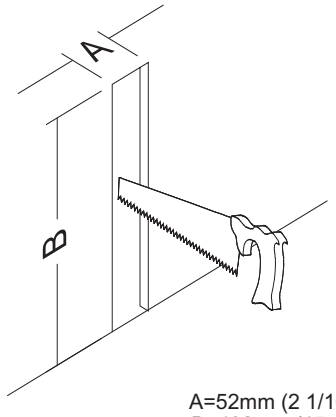

A=52mm (2 1/16")
B=402mm (15 13/16")

2

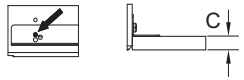

C=10mm (3/8")

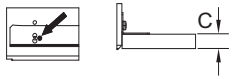

C=12.5mm (1/2")

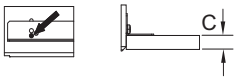

C=15mm (9/16")

C=25mm (1")

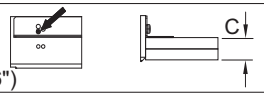

C=30mm (1 3/16")

3

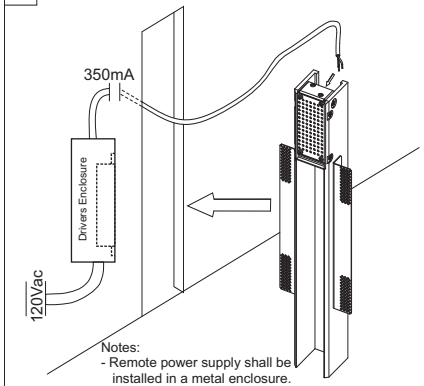

Notes:
- Remote power supply shall be installed in a metal enclosure.
- Ground each LED driver to the metal case.
- Enclosure must be provided by contractor.

4

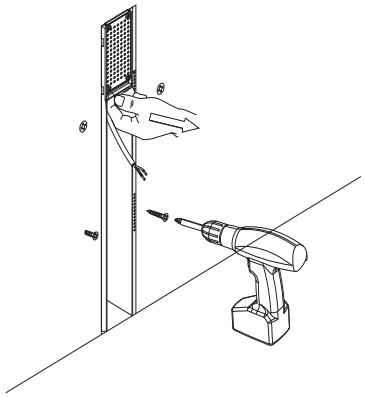

5

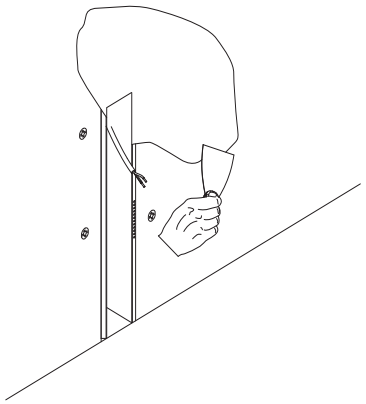

6

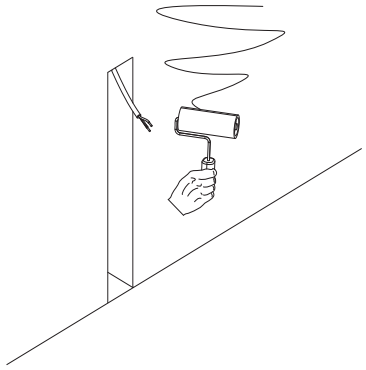

7

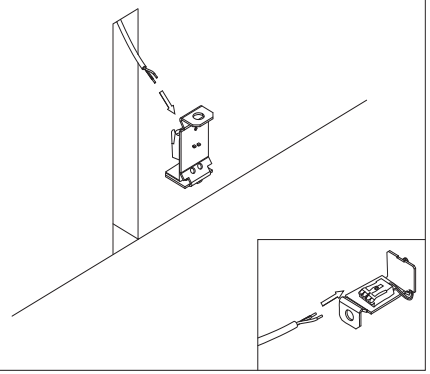

8

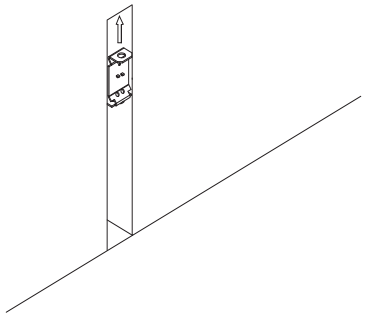

9

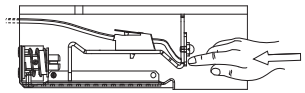

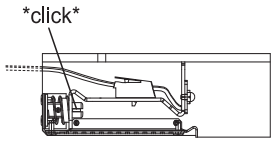

OK!

10

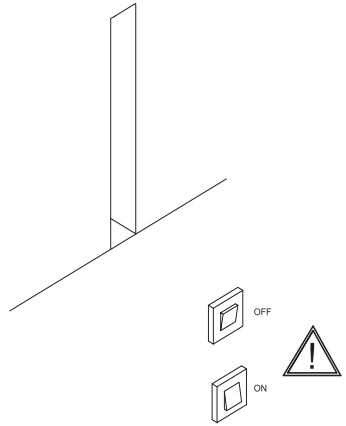

11 Accessories

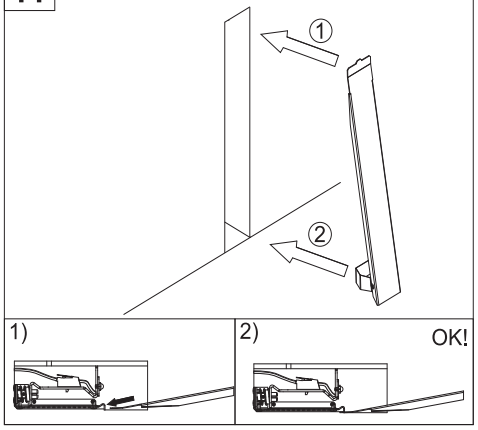

12 Accessories

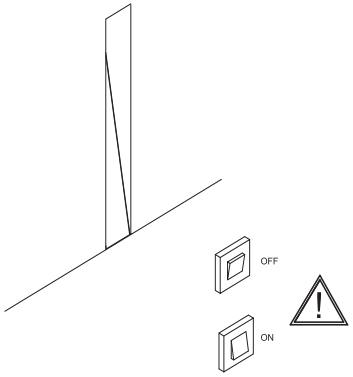

30 Tycos Drive, Toronto, Ontario, Canada M6B 1V9 PH: 800.388.3382 / 416.247.9221 FAX: 416.247.9319 www.zaneen.com tech@zaneen.com