DIXIT RA8 RECESSED

INSTALLATION GUIDE

ZANEEN®

Certified for North American Standards

IP 66

In a constant effort to supply the best product, we reserve the right to change specifications or materials without notice. The most recent specification sheets are found at zaneen.com

ZANEEN

ITEM	VOLTAGE	TYPE AND POWER OF BULB	DIAMETER OF THE HOLE	HEIGHT
L56096 -	350 mA	LED 12 W	86 mm	89 mm

IP 66

CLASS 2

Luminaires suitable for mounting on normally flammable surfaces

Never cover the luminaire with any kind of insulating material

INSTALLATION

Keep a min. 50 mm. distance between the max. overall dimensions of the fixure and the inner surfaces inside the false ceiling, as from picture 1.

Use a safety transformer for LED constant current:

- **350 mA 12 W -** Vout max 60 V

Pay attention to the polarity (+ –)

Place the transformer in an area protected from water and humidity.
Install the fitting following the instructions for pictures 2-3.
Keep this directive!
All fittings must be connect3ed by a qualified electrician.
Bringing the modifications as well as installing / using the product other than required, involves the loss of technical/mechanical features, consequently voiding the warranty, and we do not assume any liability.

1

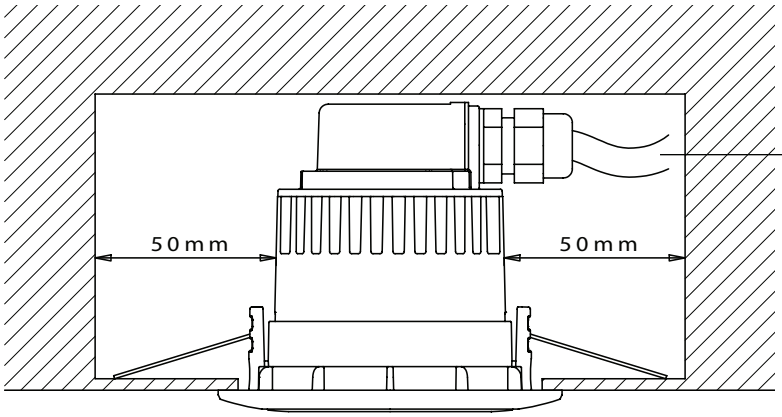

If the external flexible cable of this luminaire is damaged, it shall be exclusively replaced by the manufacturer or service agent or a similar qualified person in order to avoid hazard

In a constant effort to supply the best product, we reserve the right to change specifications or materials without notice. The most recent specification sheets are found at zaneen.com

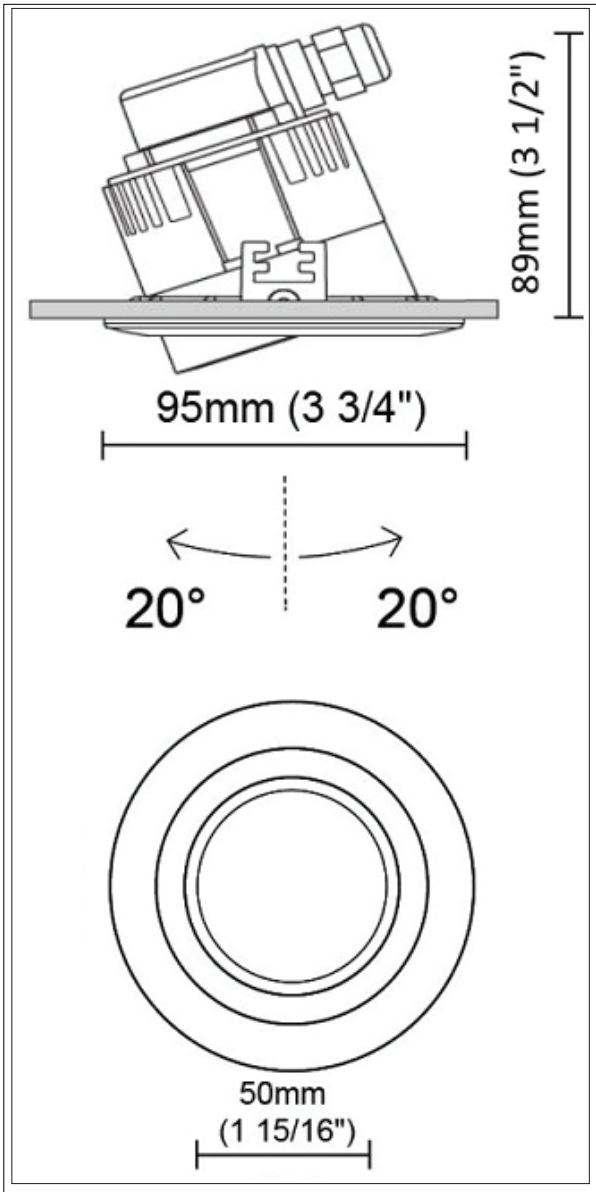

IP 65 rated remodel housing included

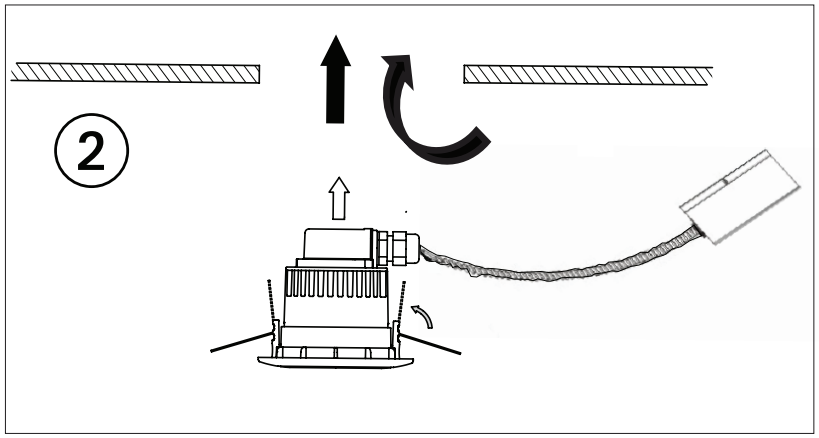

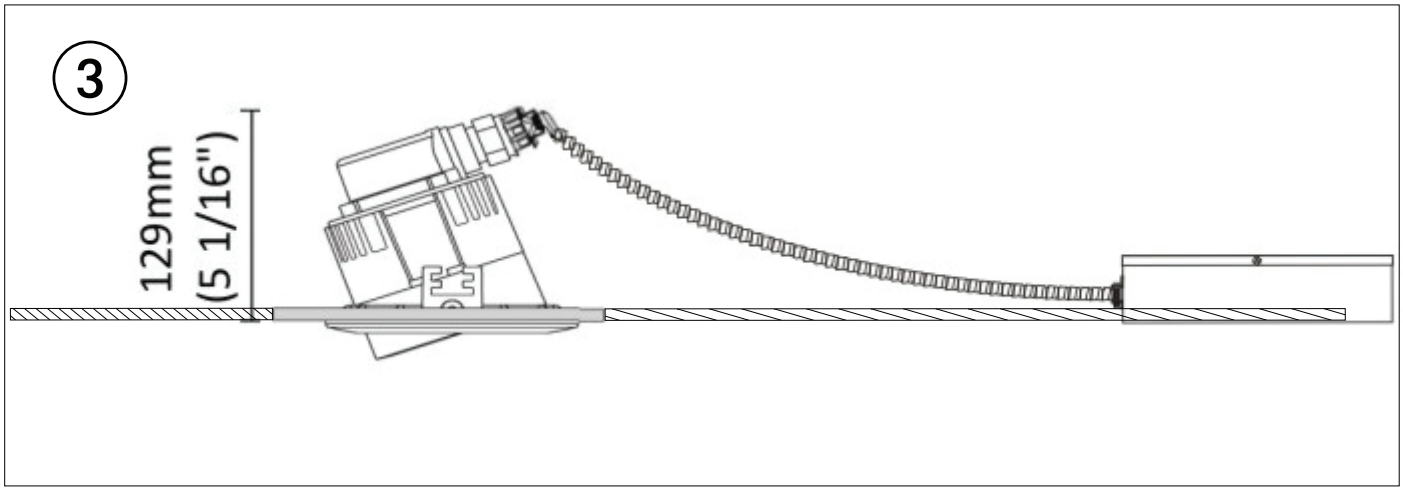

In a constant effort to supply the best product, we reserve the right to change specifications or materials without notice. The most recent specification sheets are found at zaneen.com

ZANEEN®

IMPORTANT

Post Sales Support HQ 1-800-388-3382 support@zaneen.com

EN

- Installation and electrification must be carried out by a qualified electrician, only.
- Observe all relevant building codes and regulations.
- Prior to installation or repair: disconnect power; it is the installer's responsibility to ensure for all electrical, mechanical and thermal compatibility.
- The LED light source contained in this fixture shall only be replaced by Zaneen, or a person approved by Zaneen.
- Recommendations: Keep the instruction sheet(s) in the event of maintenance and/or disassembly.

Access detailed specification sheets and the warranty policy on the product page at zaneen.com.

FR

- L'installation et l'électrification doivent être effectuées uniquement par un électricien qualifié.
- Respectez tous les codes du bâtiment et réglementations en vigueur.
- Avant l'installation ou la réparation: débranchez l'alimentation électrique; Il incombe à l'installateur des'assurer de la compatibilité électrique, mécanique et thermique.
- La source de lumière LED contenue dans ce luminaire ne doit être remplacée que par Zaneen, ou une personne approuvée par Zaneen.
- Recommandations: Conservez la (les) fiche (s) d'instructions en cas de maintenance et / ou de démontage

Accéder aux fiches techniques détaillées et à la politique de garantie sur la page du produit sur zaneen.com

In a constant effort to supply the best product, we reserve the right to change specifications or materials without notice. The most recent specification sheets are found at zaneen.com