FIJI SUSPENSION
INSTALLATION GUIDE

ZANEEN®

Certified for North American Standards

IP 20

In a constant effort to supply the best product, we reserve the right to change specifications or materials without notice. The most recent specification sheets are found at zaneen.com

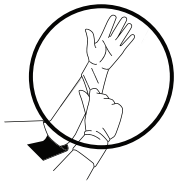

ATTENTION!
For a correct assembly, use the protective gloves included in the supply.

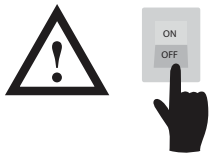

ON

OFF

FIJI hanging lamp Assembly instructions

1. Attach the bracket to the ceiling.
2. Insert the cable through the hole of the canopy.
3. Secure the cable by inserting the plastic cable clamp.
4. Shut off power to the circuit. Connect the electrical system to the network.
5. Attach the canopy to the bracket with the screws.
6. Tighten the screw to fix the electric cable without overtightening.
7. Wear the gloves supplied. Hold the glass from the bottom and gently insert the heat sink into the hole above.
8. Tighten homogeneously the 3 screws on the top of the heat sink with the special Allen key supplied o fix the glass.

(**ATTENTION**: check that the heat sink does not rotate inside the glass. Otherwise gently further tighten all the 3 screws).

Attention !
Do not plug in or unplug the connector when power is on!

120V 50/60HZ

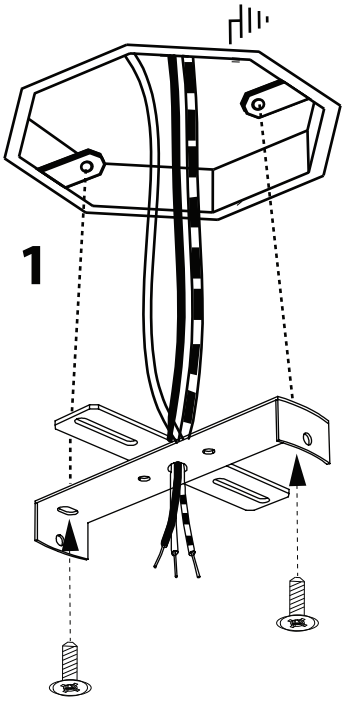

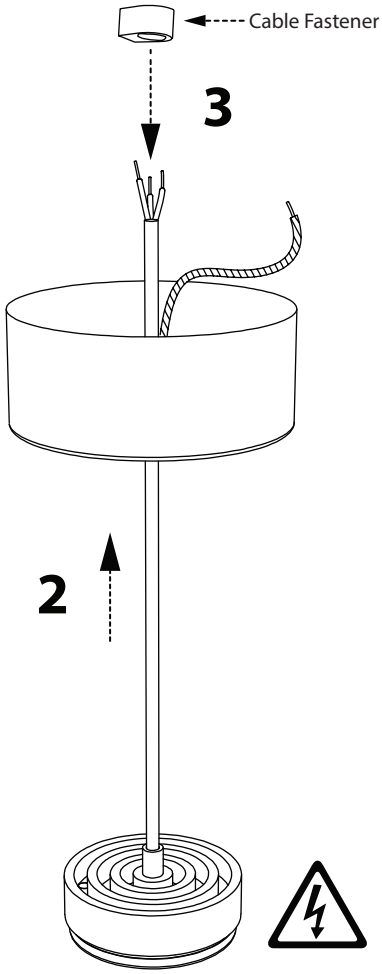

In a constant effort to supply the best product, we reserve the right to change specifications or materials without notice. The most recent specification sheets are found at zaneen.com

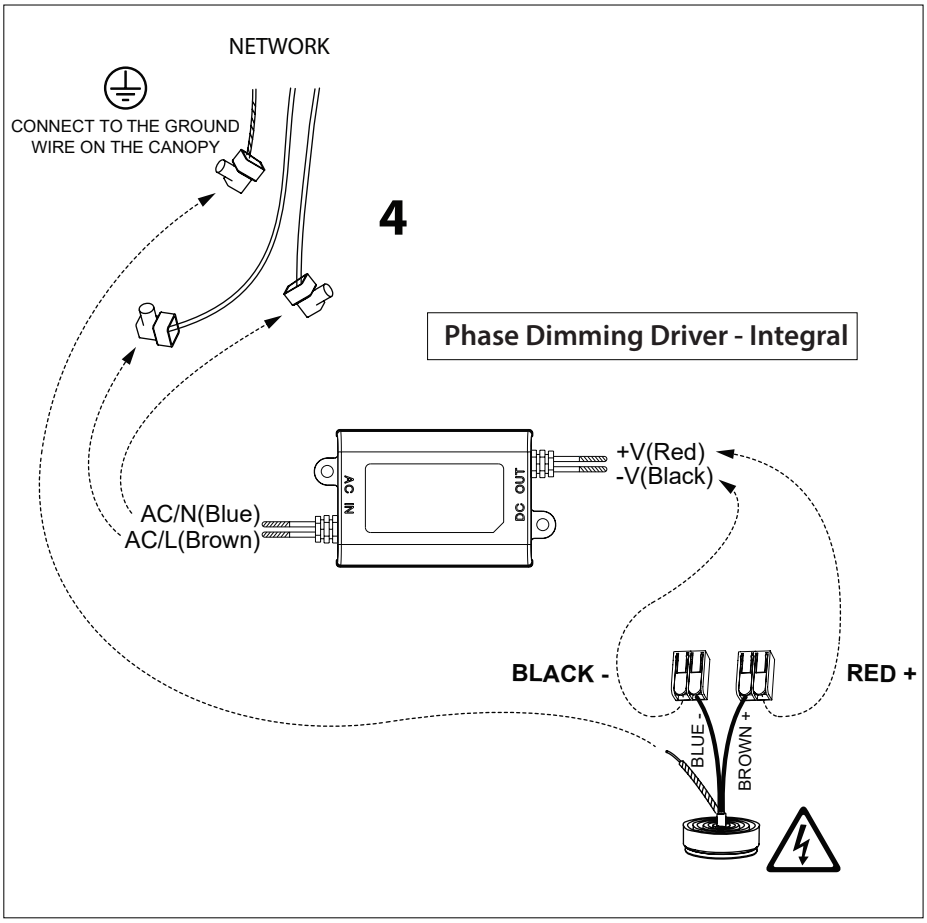

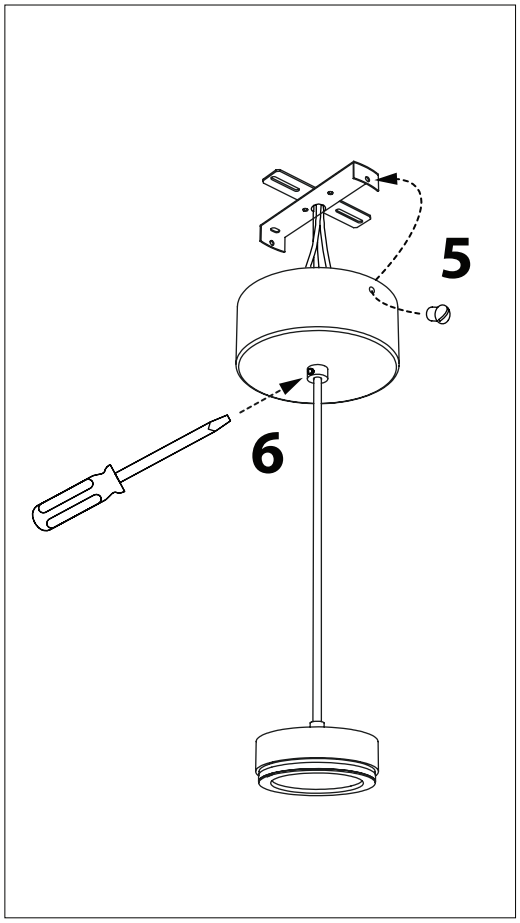

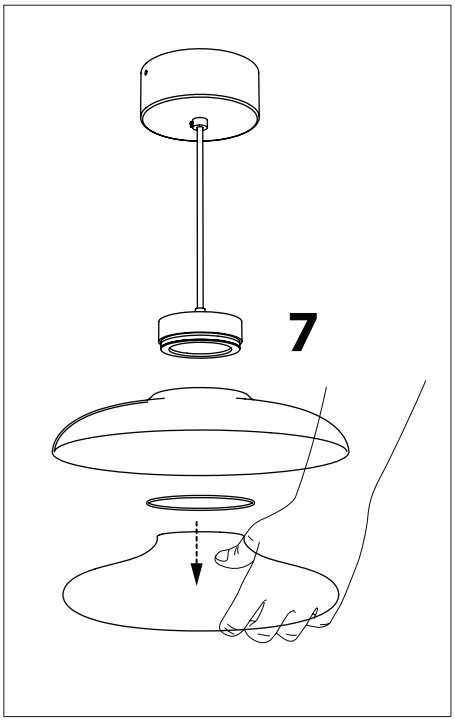

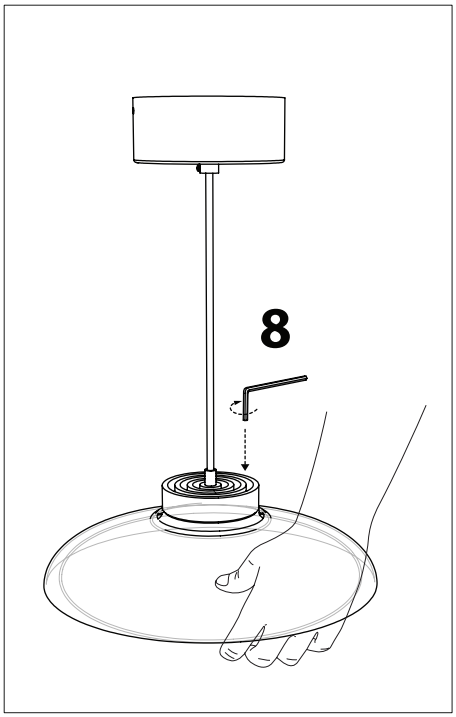

WARNING:

If the external cable of this appliance is damaged, it must be replaced by the manufacturer, its service agent, or qualified personnel equivalent, in order to avoid danger. The light source of this appliance must be replaced only by the manufacturer, its service department or equivalent qualified personnel.

Special waste handling may be required. Please contact your local authorities for more information.

Do not use the device in case of broken glass. Cater immediately to the replace ment of glass.

In a constant effort to supply the best product, we reserve the right to change specifications or materials without notice. The most recent specification sheets are found at zaneen.com

ZANEEN®

IMPORTANT

Post Sales Support HQ 1-800-388-3382 support@zaneen.com

EN

- Installation and electrification must be carried out by a qualified electrician, only.
- Observe all relevant building codes and regulations.
- Prior to installation or repair: disconnect power; it is the installer's responsibility to ensure for all electrical, mechanical and thermal compatibility.
- The LED light source contained in this fixture shall only be replaced by Zaneen, or a person approved by Zaneen.
- Recommendations: Keep the instruction sheet(s) in the event of maintenance and/or disassembly.

Access detailed specification sheets and the warranty policy on the product page at zaneen.com.

FR

- L'installation et l'électrification doivent être effectuées uniquement par un électricien qualifié.
- Respectez tous les codes du bâtiment et réglementations en vigueur.
- Avant l'installation ou la réparation: débranchez l'alimentation électrique; Il incombe à l'installateur des'assurer de la compatibilité électrique, mécanique et thermique.
- La source de lumière LED contenue dans ce luminaire ne doit être remplacée que par Zaneen, ou une personne approuvée par Zaneen.
- Recommandations: Conservez la (les) fiche (s) d'instructions en cas de maintenance et / ou de démontage

Accéder aux fiches techniques détaillées et à la politique de garantie sur la page du produit sur zaneen.com

In a constant effort to supply the best product, we reserve the right to change specifications or materials without notice. The most recent specification sheets are found at zaneen.com