ZANEEN®

IDAHO 100 SURFACE SYSTEM

SPECIFICATION SHEET

PROJECT
TYPE
NOTES
QUANTITY
DATE

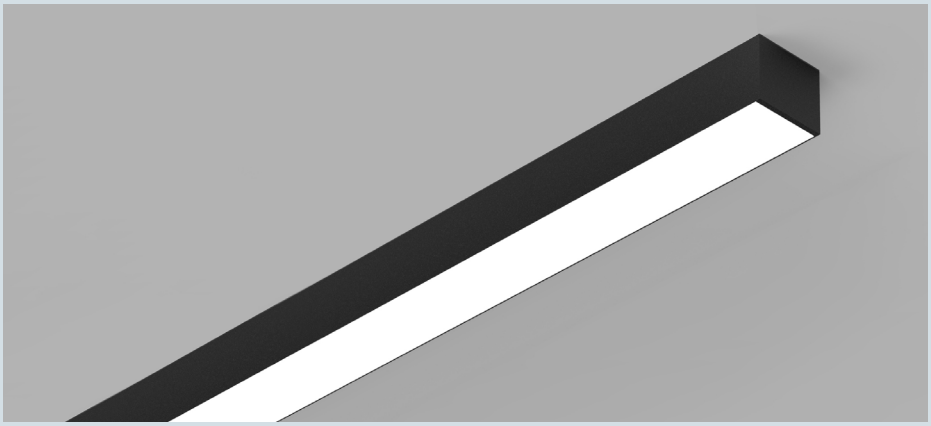

ARCHITECTURAL | IDAHO 100

The surface-mounted profile system of the IDAHO family shows rooms in a distinctive setting. The elegant lines of light of Idaho 100 can also run over corners upon request. Painted in one of 27 colors options, the luminaires can be completely individualized with text and logo cut-outs along its entire length on request. The system is available with an LED-optimized opal diffuser for an even light distribution or a microprism to reduce glare and for greater visual comfort.

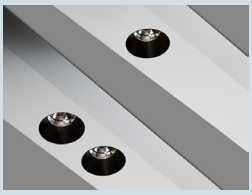

In addition to the opal and prismatic diffusers, Invader downlights can be integrated into the profile. The single or double LED lighting modules offer a great visual comfort without altering the effect of the light if a colored cone is used. This enables zoning to be achieved without additional openings in the ceiling.

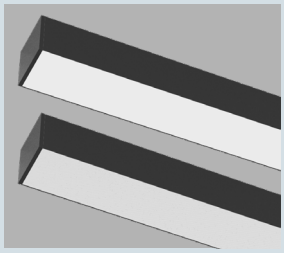

SYSTEM PROFILE

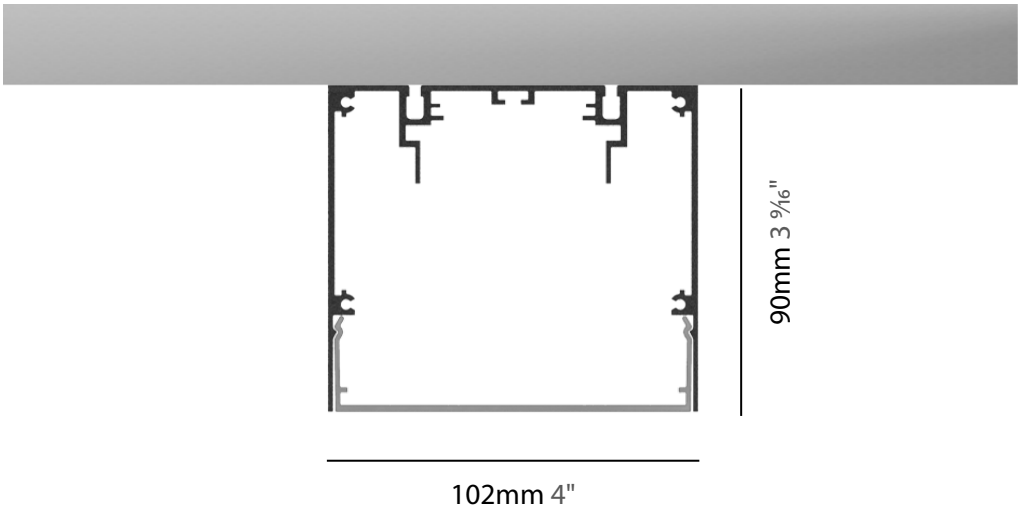

A

Zaneen Group Inc. © 2024, T 1800-388-3382, F 416-247-9319, www.zaneen.com
Available for International specifications by adding 'INT' at the end of the existing Model #. For assistance on 'custom' specifications, contact zteam@zaneen.com.
In a constant effort to supply the best product, we reserve the right to change specifications or materials without notice. The most recent specification sheets are found at zaneen.com

ZANEEN®

IDAHO 100 SURFACE SYSTEM

SPECIFICATION SHEET

PROJECT
TYPE
NOTES
QUANTITY
DATE

SYSTEM GUIDE

To make your product selection and complete system specification, proceed with the following:
review system options, create your system code in the field below and include your quantity.
For the inserts/components, use the field beside each product name.
Submit to quotes@zaneen.com to receive a formal BOM and finalized model numbers.

EXAMPLE A3ID100-SUR-SYS-UNV-DN-30K-OP-S-01-01

CRI 90 · IP20 · WARRANTY

UPON REQUEST
Additional Options _____

Engraving Letters & Signs
Color Temperature
RGB-W / Tunable
Lumen Output
Diffusers
CRI

SYSTEM BUILD CODE: A3ID100-SUR-SYS- **qty**

ELECTRICAL

Voltage	Dimming	Circuit	CCT - 90 CRI
☐ **UNV** - 120/277V	☐ **DN** - Non Dim	☐ **EMCIR** - Emergency Circuit	☐ **30K** - 3000K
☐ **120** - 120V	☐ **DP** - Phase Dim (Triac/ELV)	☐ **MC** - Multiple Circuits	☐ **35K** - 3500K
☐ **347** - 347V	☐ **DV** - 0-10V (100-1%)		☐ **40K** - 4000K
	☐ **DD** - DALI (100-1%)		

	Wattage	Delivered Lumen (lm)		
	(W)	**3000K**	**3500K**	**4000K**
Per meter	17.8	1916	1985	2025
Per foot	5.4	585	606	618

Approximate values

PHYSICAL

Distribution	Diffuser	Run Shapes*	Finish
Direct	☐ **OP** - Opal	☐ **S**____' Straight	Profile ◆ ___ End Cap ◆ ___
	☐ **MP** - Microprism	☐ **L**____'x____'	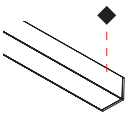 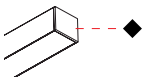
		☐ **U**____'x____'x____'	
		☐ **R**____'x____' Rectangle	
		☐ **PAT -** Custom Pattern 45°-180°Angle (Consult factory with drawings)	(27 colors) See page 5 for color options and use 2 digit numbers to indicate your choices

*The closest possible length will be provided based on the standard LED board lengths (1140mm 44 7/8", 1420mm 55 7/8", 1700mm 66 15/16", 1980mm 77 15/16", 2270mm 89 3/8")

Opal and Microprism diffusers - Max length of a single run is 3000mm 118 1/8". Lengths are pre cut at the factory.

INSERTS

INSERT BUILD CODE EXAMPLE: A38608-DN-30K-01-20

INVADER	**A38608-**				qty	
Wattage: 9.8W	Dimming	CCT - 90 CRI	Finish	Reflector	Delivered Lumen (lm)	
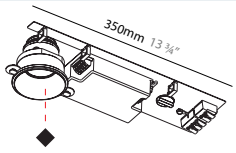	☐ **DN** - Non Dim	☐ **30K** - 3000K	◆ ___	☐ **20** - 20°	3000K	693
	☐ **DP** - Phase Dim	☐ **35K** - 3500K	(27 colors)	☐ **40** - 40°	3500K	729
	☐ **DV** - 0-10V	☐ **40K** - 4000K		☐ **60** - 60°	4000K	744

A

Zaneen Group Inc. © 2024, T 1800-388-3382, F 416-247-9319, www.zaneen.com
Available for International specifications by adding 'INT' at the end of the existing Model #. For assistance on 'custom' specifications, contact zteam@zaneen.com.
In a constant effort to supply the best product, we reserve the right to change specifications or materials without notice. The most recent specification sheets are found at zaneen.com

ZANEEN®

IDAHO 100 SURFACE SYSTEM

SPECIFICATION SHEET

PROJECT
TYPE
NOTES
QUANTITY
DATE

FINISHES OPTIONS:
See page 5 for color options and use 2 digit numbers to indicate your choices

INSERTS

INVADER DOUBLE	A38611-				qty	
Wattage: 19.6W	Dimming	CCT - 90 CRI	Finish	Reflector	Delivered Lumen (lm)	
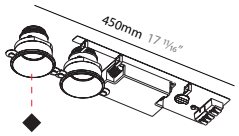	☐ **DN** - Non Dim	☐ **30K** - 3000K	◆ ___	☐ **20** - 20°	3000K	1387
	☐ **DP** - Phase Dim	☐ **35K** - 3500K	(27 colors)	☐ **42** - 40°	3500K	1457
	☐ **DV** - 0-10V	☐ **40K** - 4000K		☐ **60** - 60°	4000K	1487

COMPONENTS

CAP PROFILE	A39924-	qty
per meter	Finish	
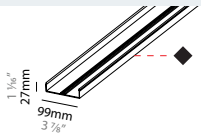	◆ ___ (27 colors)	

Cap profile - Max length of a single run is 3000mm 118 1/8". Lengths are pre cut at the factory.

Zaneen Group Inc. © 2024, T 1800-388-3382, F 416-247-9319, www.zaneen.com

Available for International specifications by adding 'INT' at the end of the existing Model #. For assistance on 'custom' specifications, contact zteam@zaneen.com.
In a constant effort to supply the best product, we reserve the right to change specifications or materials without notice. The most recent specification sheets are found at zaneen.com

ZANEEN®

IDAHO 100 SURFACE SYSTEM

SPECIFICATION SHEET

PROJECT
TYPE
NOTES
QUANTITY
DATE

SYSTEM SUMMARY

System

Type
Surface
Rated for Dry Locations Ceiling and Wall Mounted

Approval Status
CSA Certified to CSA and UL Standards

Emission
Refer to emission icon beside each light insert and symbol legend for descriptions

Efficiency
Acrylic Opal Diffuser (snap-in) lens 43%
Micro-prismatic Diffuser (snap-in) lens 53%

Profile

Measurement
w 102mm (4") x ht. 90mm (3 9/16")

Housing
Anodized extruded aluminum profile available per meter and field-cuttable
Profiles have a maximum length of 3000mm (9' 10 15/16") and joined together with couplers to ensure uniform appearance and easy installation

Electrical

Connections
Luminaries are pre-wired with a factory installed branch circuit wiring and quick-release connectors.
Through wiring is used to connect the luminaries.

Power Feed
Located 2 inches from one end of the fixture, on top of the profile
If a different location is required, please specify
3 Wires - non-dimming or phase dimming
4 Wires - two circuits of non-dimming or phase dimming
5 Wires - 0-10V dimming or dali dimming

LED Driver
Integrated with inserts
Electronic Class 2 driver, Universal 120V/277V
Non-Dimming Driver, Phase Dimming Driver, and 0-10V Dimming Driver (10-100%)
Consult factory for driver cutsheet
If a different driver is required, please specify

Emergency Inverter Compatible
To be installed remotely, and provided by others
It can be located up to 250m away from the fixture

Emergency circuit wiring is available upon request (Isolated track with dedicated driver used for emergency circuit will connect to emergency battery pack - supplied by others)

General

Features
Whether text, symbols, or branding, IDENTITY allows the luminaire to be customized on request with cut-outs along its entire length. Easily the best solution to be creative and make a space unique for branding, organizing, and motivation. Identity engraving for letters and signs have a standard price per character.
.
In addition to the opal and prismatic diffusers, powerful downlights partially with KORONA CONE can be integrated into the profile. This enables zoning to be achieved without additional openings in the ceiling.

All LED-Boards are protected from electrostatic discharge (ESD) and direct contact with the LED by a highly transparent acrylic glass.

End-caps and cap profile can be specified with a different color option to the profile to create unique combinations.

Custom Requests and Additional Options
Availability depends on insert, system, and configuration
Must consult factory and allow up to 5 business days for an answer

Color temperature, Special CRI, RGB-W, tunable, individual sizes, special diffuser, light inserts with different outputs, light inserts on different circuits, miter cuts

Invader spot integrated into opal diffuser available; depending on size and length

90° corner (A3848200) and 45°-180° corner (A3871700) available upon request

Configuration
Consult factory for patterns or custom designs
Provide configuration drawings

SQUARE PATTERN | L PATTERN | CUSTOM PATTERN | 45°-180° ANGLE

*Shop drawings provided upon receiving purchase order

Warranty

ZANEEN provides a limited warranty from date of purchase to original purchaser

LED Inserts: 5 year tested for 50,000 hours at 70% lumen output (L70)
LED Driver: 5 year
Non-Electrical Components: 1 year

*Check boxes to complete specification order and submit to quotes@zaneen.com to receive a formal BOM and a finalized model number

*In a constant effort to supply the best product, we reserve the right to change specifications or materials without notice. The most recent specification sheets are found at zaneen.com

Zaneen Group Inc. © 2024, T 1800-388-3382, F 416-247-9319, www.zaneen.com
Available for International specifications by adding 'INT' at the end of the existing Model #. For assistance on 'custom' specifications, contact zteam@zaneen.com.
In a constant effort to supply the best product, we reserve the right to change specifications or materials without notice. The most recent specification sheets are found at zaneen.com

ZANEEN®

IDAHO 100 SURFACE SYSTEM

SPECIFICATION SHEET

PROJECT

TYPE

NOTES

QUANTITY

DATE

FINISH COLORS

Sparkling Silver - **01**

Black Velvet - **02**

Crystal White - **03**

Creamy - **04**

Hampton Bay - **05**

Urban Forest - **07**

In the Army - **08**

Rusty Angel - **09**

Fade to Grey - **12**

Mysterious Grey - **13**

Lost Dream - **15**

Purple Sky - **16**

Fresh Oh - **17**

Funky P - **18**

Kissing Aphrodite - **19**

Poseidon's Paradise - **20**

Blue Sky - **21**

Spring Green - **22**

Mellow Yellow - **23**

Golden Heart - **24**

Champagne Cream - **26**

Copper Mine - **27**

Ancient Bronze - **28**

Jazz Gold - **29**

Olive Breeze - **30**

Moonlight Silver - **31**

Rosewood Red - **32**

Digital: Not all screens are calibrated the same, and therefore, colors will appear differently between screens.
Physical: When texture is involved, there will be variations in color, character and tone within a product series and between product families.
Champagne Cream, Copper Mine, Ancient Bronze + Jazz Gold: These finishes have slight fading from specific powder coating production. Each luminaire will slightly vary.

RAL Color Upon Request

A

Zaneen Group Inc. © 2024, T 1800-388-3382, F 416-247-9319, www.zaneen.com
Available for International specifications by adding 'INT' at the end of the existing Model #. For assistance on 'custom' specifications, contact zteam@zaneen.com.
In a constant effort to supply the best product, we reserve the right to change specifications or materials without notice. The most recent specification sheets are found at zaneen.com

ZANEEN®

IDAHO 100 SURFACE SYSTEM

SPECIFICATION SHEET

PROJECT

TYPE

NOTES

QUANTITY

DATE

LEGEND

	floor-mounted		pivotable		special LED (upon request) RGB, RGBW, tunable, gold+, meat+, art+, fashion+
	wall and ceiling: recessed and surface mounted		rotating		warm dim / natural dimming LED
	ceiling-mounted and wall-mounted		illuminate tilted		rechargeable battery powered
	wall-mounted		color of suspension cable		fixture with natural vivid LED (upon request)
	omni-directional light distribution		length of suspension cable	CRI	color rendering index
	direct light distribution		reflector degree selection	°K	color temperature
	direct/indirect light distribution	S S	super spot	LM	lumen (luminous flux)
	indirect light distribution		lens	LM W	efficacy (lumens per watt)
	asymmetric light distribution		lens pack	UGR	Unified Glare Rating (UGR) range from 5-40
	aura light distribution		shine ring		marine grade (AISI 316 stainless steel)
	round wall or ceiling cut-out		integrated shine ring with diffuser		walk on
	square wall or ceiling cut-out		free individual colors 01-29		drive on
	the supplied jig specifies the cutout dimensions	C	individual colors: 00 (free of charge), 01-25 (extra charge)		Dark Sky Compliance
M	minimum distance (meters) lamp - object		luminaire part to be colored (F1)		Americans with Disabilities Act (less than 4" off the wall located between 27"-84" from floor)
	recessed depth		luminaire part to be colored (F2)		lamp protected against explosion
	ceiling thickness in mm		luminaire part to be colored (F3)		blown glass using traditional methods by master glass blower
	ceiling thickness selection		luminaire part to be colored (F4)		acoustic material
	dimmable DP (phase), DV (0-10V), DD (dali), DS (step-dim)		luminaire part to be colored (F5)		protection class I, protection insulation
	included or excluded LED driver/transformer/ control gear		color of 3-circuit adaptor		protection class II, protection insulation
	separately switchable		indirect diffuser		ETL Certified to UL and CSA Standards
	sensor	D	direct diffuser		UL Certified to UL and CSA Standards
	remote control		ball-proof (upon request)		CSA Certified to UL and CSA Standards
	available upon request		accessory		Certified for North American Standards

IP RATING

IP20	protected against ingress of solid bodies greater than 12.5mm (finger)
IP33	protected against ingress of solid bodies greater than 2.5mm protected against sprays of water up to 60 degrees from the vertical (rain)
IP40	protected against ingress of solid bodies greater than 1mm (wire) no protection against the ingress of moisture
IP43	protected against ingress of solid bodies greater than 1mm (wire) protected against sprays of water up to 60 degrees from the vertical (rain)
IP44	protected against ingress of solid bodies greater than 1mm (wire) protected against water splashed from all directions
IP54	protected against limited ingress of dust (wet rooms/covered outdoor areas) protected against water splashed from all directions
IP65	protected against ingress of dust protected against jets of water
IP66	protected against ingress of dust protected against powerful jets of water or heavy seas
IP67	protected against ingress of dust protected against immersion of water between 15cm - 1m for 30 minutes
IP68	protected against ingress of dust protected against immersion of water under pressure for long periods

IK RATING

IK01	protected against 0.14 joules impact (equivalent to 0.25kg mass dropped from 56mm above the surface)
IK02	protected against 0.2 joules impact (equivalent to 0.25kg mass dropped from 80mm above the surface)
IK03	protected against 0.35 joules impact (equivalent to 0.25kg mass dropped from 140mm above the surface)
IK04	protected against 0.5 joules impact (equivalent to 0.25kg mass dropped from 200mm above the surface)
IK05	protected against 0.7 joules impact (equivalent to 0.25kg mass dropped from 280mm above the surface)
IK06	protected against 1 joules impact (equivalent to 0.25kg mass dropped from 400mm above the surface)
IK07	protected against 2 joules impact (equivalent to 0.5kg mass dropped from 400mm above the surface)
IK08	protected against 5 joules impact (equivalent to 1.7kg mass dropped from 300mm above the surface)
IK09	protected against 10 joules impact (equivalent to 5.0kg mass dropped from 200mm above the surface)
IK10	protected against 20 joules impact (equivalent to 5.0kg mass dropped from 400mm above the surface)

Zaneen Group Inc. © 2024, T 1800-388-3382, F 416-247-9319, www.zaneen.com

Available for International specifications by adding 'INT' at the end of the existing Model #. For assistance on 'custom' specifications, contact zteam@zaneen.com.
In a constant effort to supply the best product, we reserve the right to change specifications or materials without notice. The most recent specification sheets are found at zaneen.com

PROJECT
TYPE
NOTES
QUANTITY
DATE

WIRING DIAGRAMS

ALL ZANEEN FIXTURES ARE MANUFACTURED TO NORTH AMERICAN ELECTRICAL STANDARDS

Post Sales Support
HQ 1-800-388-3382 X 625 support@zaneen.com

IMPORTANT

- Do NOT connect directly to line voltage
- There is a minimum and maximum load per driver (See fixture and driver specifications).
- Fixture MUST be connected to LED driver, prior to turning power on

PHASE/NON-DIMMING WIRING DIAGRAM

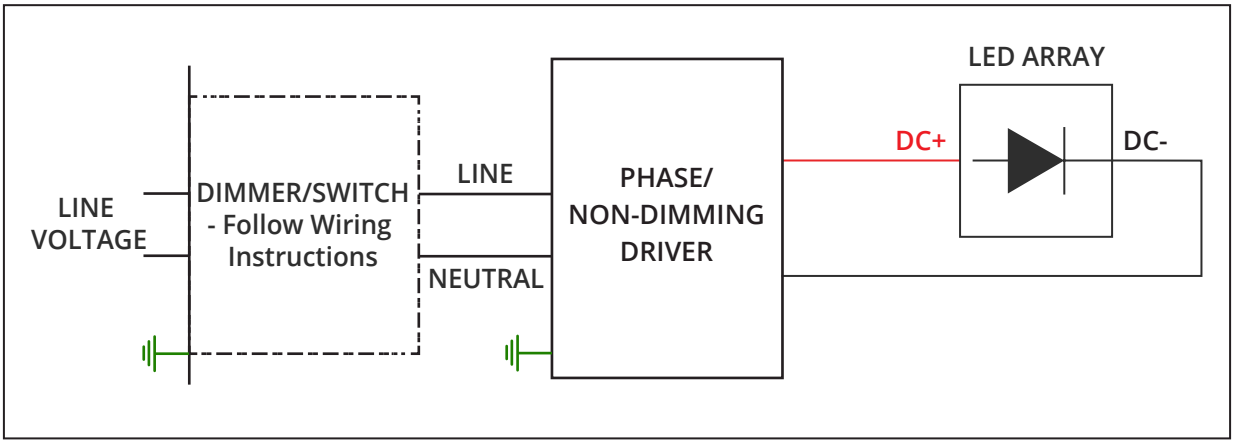

0-10V DIMMING WIRING DIAGRAM

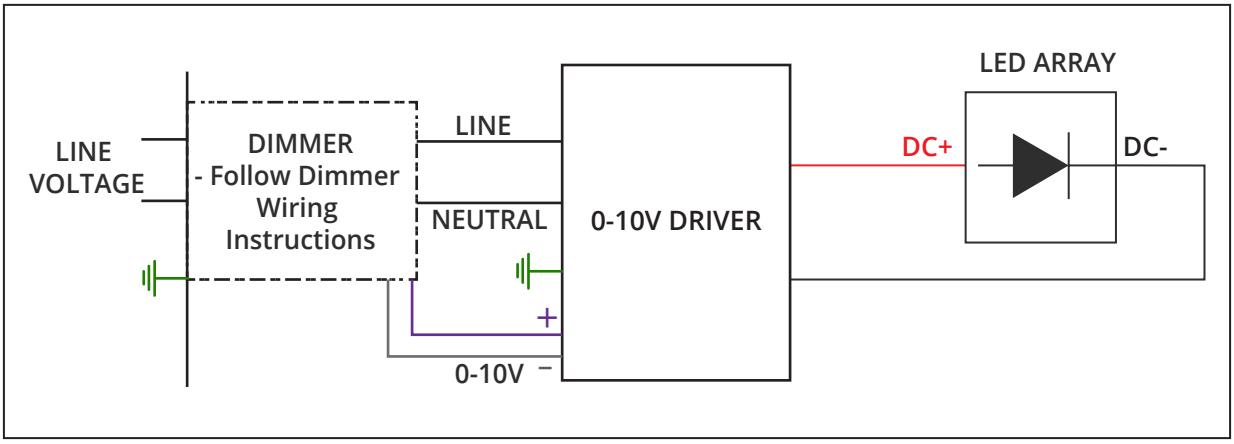

Zaneen Group Inc. © 2024, T 1800-388-3382, F 416-247-9319, www.zaneen.com
Available for International specifications by adding 'INT' at the end of the existing Model #. For assistance on 'custom' specifications, contact zteam@zaneen.com.
In a constant effort to supply the best product, we reserve the right to change specifications or materials without notice. The most recent specification sheets are found at zaneen.com

ZANEEN®

IDAHO 100 SURFACE SYSTEM

SPECIFICATION SHEET

PROJECT

TYPE

NOTES

QUANTITY

DATE

Insert custom drawing here or attach with additional pages

A

Zaneen Group Inc. © 2024, T 1800-388-3382, F 416-247-9319, www.zaneen.com

Available for International specifications by adding 'INT' at the end of the existing Model #. For assistance on 'custom' specifications, contact zteam@zaneen.com.
In a constant effort to supply the best product, we reserve the right to change specifications or materials without notice. The most recent specification sheets are found at zaneen.com