ZANEEN®

Invader Surface Ceiling

Installation Instruction

1

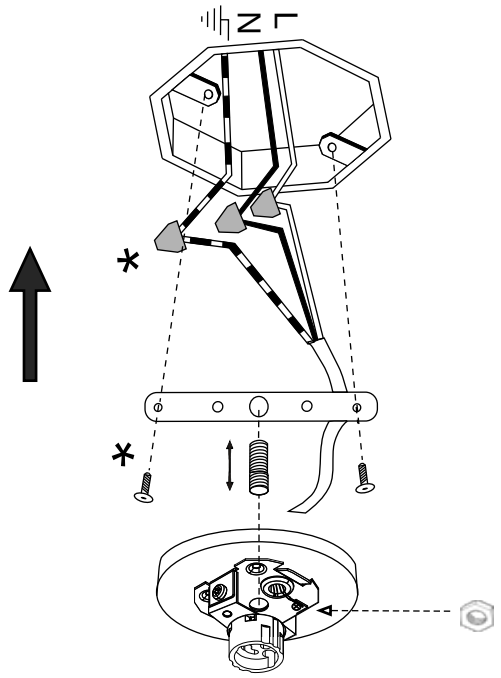

2

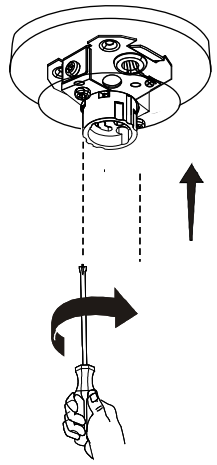

3

only for GU10

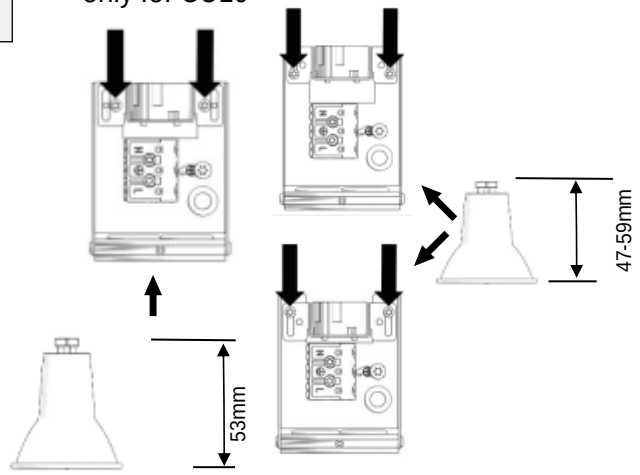

4

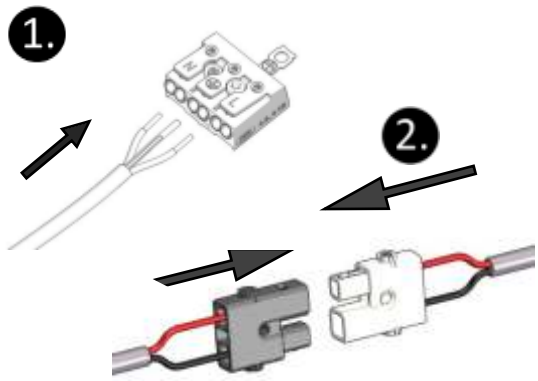

Attention! Do not plug in or unplug the connector when power is on!

5

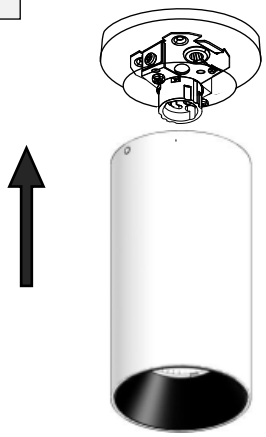

6

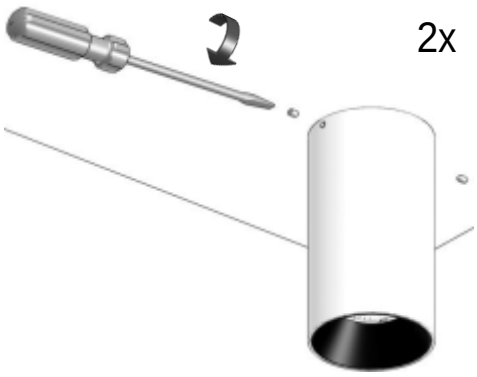

7

30 Tycos Drive, Toronto, Ontario, Canada M6B 1V9 PH: 800.388.3382 / 416.247.9221 FAX: 416.247.9319 www.zaneen.com tech@zaneen.com

MA-0744